Petri nets — Homework 4

Due 05.06.2018

Exercise 4.1

(a) Show that
$$X = \big\{(x_1, x_2, x_3) \in \mathbb{N}^3 : (x_1 + 3 \leq x_2 \leq x_3 + 1) \vee (x_2 = 2x_1 + x_3 + 5)\big\}$$
is semilinear by giving its representation as a finite set of roots and periods.

(b) Give a Petri net whose reachability set equals X up to a projection. More precisely, give a Petri net (with weights) $\mathcal{N} = (P, T, W)$ such that $\{p_{\text{init}}, p_1, p_2, p_3\} \subseteq P$ and
$$\{p_{\text{init}}\} \xrightarrow{*} M \text{ and } M(p_{\text{init}}) = 0 \iff (M(p_1), M(p_2), M(p_3)) \in X.$$

Exercise 4.2
Consider the following Petri net (with weights) $\mathcal{N}$:

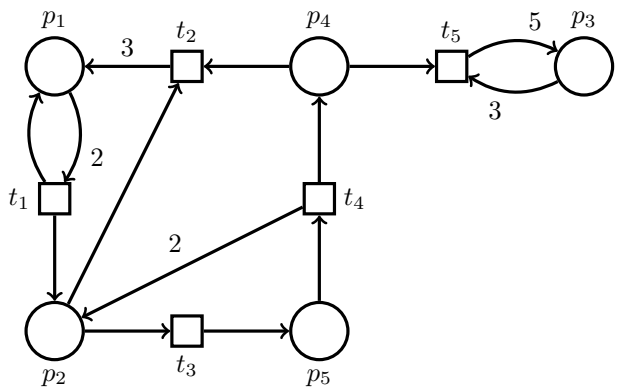

(a) Build the incidence matrix of $\mathcal{N}$.

(b) Let $M_0 = \{p_1, p_1\}$. Try to determine whether
$$M_0 \xrightarrow{*} \{p_1, p_1, p_1, p_4\},$$
$$M_0 \xrightarrow{*} \{p_1, p_1, p_1, p_1, p_2\},$$
$$M_0 \xrightarrow{*} \{p_1, p_2, p_5\},$$
by solving the marking equation.

(c) Does $\{p_1, p_5\} \xrightarrow{*} \{p_2, p_2, p_2, p_4\}$? Prove your answer.

Exercise 4.3

Consider the following Petri net $\mathcal{N} = (P, T, F)$:

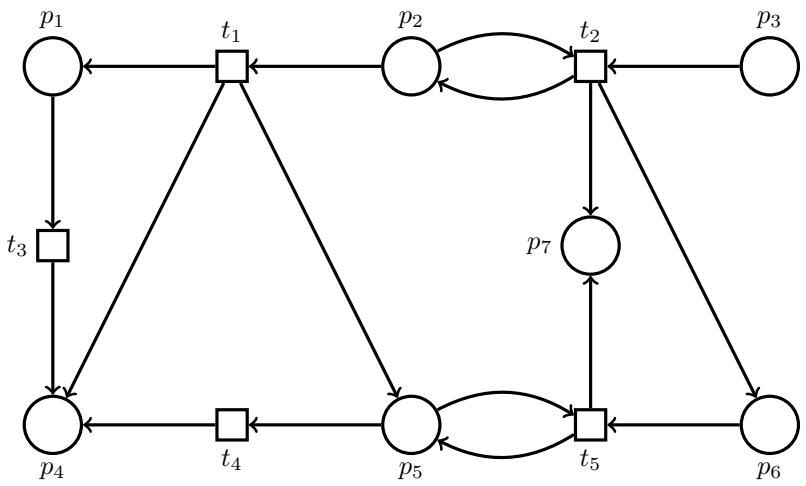

(a) Give a basis of the vector space of S-invariants of $\mathcal{N}$. [Hint:]

(b) Let $M = \{p_1, p_2, p_4, p_4\}$ and $M' = \{p_1, p_3, p_5\}$. Using (a), can you tell whether $(\mathcal{N}, M)$ and $(\mathcal{N}, M')$ are bounded? live?