Petri nets — Homework 5

Due 27.06.2017

Exercise 5.1
Consider the following Petri net $\mathcal{N} = (P, T, F)$:

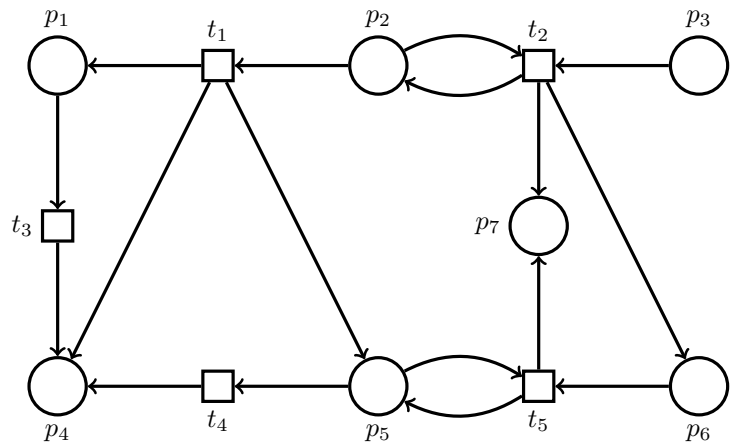

(a) Give a basis of the vector space of T-invariants of $\mathcal{N}$. [Hint:]

(b) Let $M = \{p_1, p_2, p_4, p_4\}$ and $M' = \{p_1, p_3, p_5\}$. We have shown that $\mathcal{N}$ is bounded from any initial marking in #4.3(b). Can you tell whether $(\mathcal{N}, M)$ and $(\mathcal{N}, M')$ are live?

Exercise 5.2

(a) Show that the union of two traps is also a trap.

(b) Give an algorithm that takes as input a Petri net $\mathcal{N} = (P, T, F)$ and a subset $R \subseteq P$, and that returns the largest trap of $\mathcal{N}$ contained in R.

(c) Show that your algorithm is correct and that it always terminates.

Exercise 5.3
Consider the following Petri net $\mathcal{N}$:

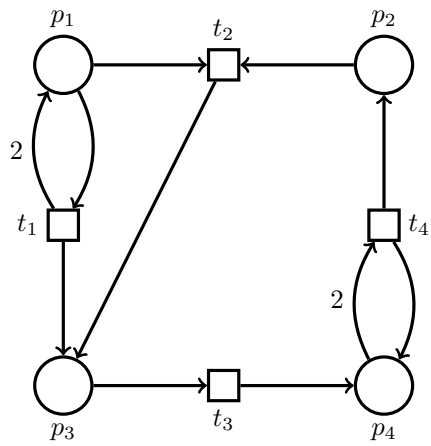

(a) Use siphons/traps to prove or disprove that $\mathcal{N}$ is live from $M_0 = \{p_2, 3 \cdot p_4\}$,

(b) Can the marking equation be used to prove or disprove that $\{p_2, p_4\} \xrightarrow{*} \{p_1, 3 \cdot p_2, p_3\}$? Is so, why? If not, can traps or siphons help?

Exercise 5.4
Let $\mathcal{N} = (P, T, F)$ be a Petri net. Let $Q_x = \{p : p \in P, x_p = \texttt{true}\}$ for every $x \in \{\texttt{false}, \texttt{true}\}^P$.

(a) Give a Boolean formula φ over variables $\{x_p : p \in P\}$ such that $\varphi(x)$ holds if and only if Q_x is a siphon of $\mathcal{N}$.

(b) Let $M_0, M \in \mathbb{N}^P$. Modify you previous construction in order to obtain a formula ψ such that $\psi(x)$ holds if and only if Q_x is a siphon of $\mathcal{N}$, $M_0(Q_x) = 0$ and $M(Q_x) > 0$.

(c) Construct ψ for the Petri net of #5.3 with $M_0 = \{p_1, p_4\}$ and $M = \{p_1, 3 \cdot p_2, p_3\}$.