Reachability in Live and Safe Free-Choice Petri Nets is NP-complete

Javier Esparza*
Institut für Informatik
Technische Universität München
Arcisstr. 21, D-80290 München, Germany

Abstract

The complexity of the reachability problem for live and safe free-choice Petri nets has been open for several years. Several partial results seemed to indicate that the problem is polynomial. We show that this is unlikely: the problem is NP-complete.

1 Introduction

Free-choice Petri nets were first defined and studied in the early seventies [1, 7]. Today, they are accepted as the largest class of Petri nets for which relevant analysis problems can be solved in polynomial time.[1] A series of papers, starting with [5] and culminating with [10], has shown that the problem of deciding if a free-choice Petri net is live and bounded can be solved in $O(n \cdot m)$ time, where n and m are the number of places and transitions of the net, respectively. In turn, many analysis problems of live and bounded free-choice Petri nets have also been shown to have polynomial time complexity [4].

Due to this series of results, the reachability problem of live and bounded free-choice Petri nets, i.e., the problem of deciding if a given marking is reachable from the initial marking, has also been believed to be polynomial since around 1991. However, despite some very promising partial results, a proof has remained elusive. In [2] it was shown that when the Petri net is also *cyclic*[2] then the reachability problem can be reduced to solving a system of n ordinary linear equations with m variables, and is therefore polynomial. Later, [4] proved that every reachable marking can be reached from the initial marking by an occurrence sequence of length $O(b \cdot m^3)$, where b is the bound of the net, i.e., the maximum number of tokens that a reachable marking can put in a place. More recently, [11] provided a structural characterization of the set of reachable markings which seemed to be an important step towards a polynomial algorithm, and [9] showed how to decide in $O((n+m)^3)$ time whether two given places can be simultaneously marked.

*Partially supported by the Sonderforschungsbereich 342, Teilprojekt A3.

[1] Although some of the results valid for free-choice Petri nets have been extended to slightly larger classes.

[2] A Petri net is cyclic if the initial marking is reachable from any other reachable marking.

We prove in this paper that, contrary to the expectations raised by all these results, the reachability problem is unlikely to be polynomial. Even the reachability problem for live and safe free-choice Petri nets (where safe means that no reachable marking puts more than one token in any place) is NP-complete.

The paper is organised as follows. Section 2 contains basic definitions. Section 3 contains the NP-completeness proof for live and safe free-choice Petri nets. Section 4 extends the result to the live and bounded case.

2 Basic definitions

We assume that the reader is familiar with the basic notions and results of the theory of NP-completeness (see [6] for an introduction).

A *net* N is a triple (S, T, F), where S and T are two disjoint, finite sets of *places* and *transitions*, and $F \subseteq (S \times T) \cup (T \times S)$ is a *flow relation*. Places and transitions are generically called *nodes*. We identify F and its characteristic function $(S \times T) \cup (T \times S) \to \{0, 1\}$.

Given a node x of N, ${}^\bullet x = \{y \mid (y, x) \in F\}$ is the *preset* of x and $x^\bullet = \{y \mid (x, y) \in F\}$ is the *postset* of x. Given a set of nodes X of N, we define ${}^\bullet X = \bigcup_{x \in X} {}^\bullet x$ and $X^\bullet = \bigcup_{x \in X} x^\bullet$.

A triple (S', T', F') is a *subnet* of N if $S' \subseteq S$, $T' \subseteq T$ and $F' = F \cap ((S' \times T') \cup (T' \times S'))$.

A net (S, T, F) is *free-choice* if $(s, t) \in F$ implies ${}^\bullet t \times s^\bullet \subseteq F$ for every $s \in S, t \in T$.[3]

A *marking* of N is a mapping $M\colon S \to \mathbb{N}$. A marking M *enables* a transition t if $M(s) \geq F(s, t)$ for every place s. If t is enabled at M, then it can *occur*, and its occurrence leads to the successor marking M' which is defined for every place s by $M'(s) = M(s) + F(t, s) - F(s, t)$.

A *Petri net* or *system* is a pair (N, M_0) where N is a connected net and M_0 is a marking of N.

The expression $M_1 \xrightarrow{t} M_2$, where M_1, M_2 are markings of N, denotes that M_1 enables transition t, and that the marking reached by the occurrence of t is M_2. The expression $M \xrightarrow{\sigma} M'$, where σ is a sequence $\sigma = t_1\, t_2 \ldots t_n$ of transitions, denotes that there exist markings $M_1, M_2, \ldots, M_{n-1}$ such that $M \xrightarrow{t_1} M_1 \xrightarrow{t_2} M_2 \ldots M_{n-1} \xrightarrow{t_n} M'$. Such an expression is called *occurrence sequence*. We also say that a sequence σ of transitions is an *occurrence sequence of* (N, M_0) if there exists a marking M such that $M_0 \xrightarrow{\sigma} M$.

A marking M' is *reachable* from M if there exists an occurrence sequence $M \xrightarrow{\sigma} M'$. The reachable markings of a system (N, M_0) are the markings reachable from M_0.

A system (N, M_0) is *free-choice* if N is a free-choice net.

A system is *live* if for every reachable marking M and every transition t there exists a marking M' reachable from M which enables t. A system is *b-bounded* if $M(s) \leq b$ for every place s and every reachable marking M, and *bounded* if it is b-bounded for some number b. A 1-bounded system is also called *safe*.

3 Reachability in live and safe free-choice systems

We abbreviate live and safe (bounded) free-choice system to LSFC-system (LBFC-system). We consider the following problem:

[3] We follow the terminology of [4]. These nets are also called extended free-choice nets in the literature.

Reachability (in LSFC-systems)

Given: a LSFC-system (N, M_0), a marking M of N;

To decide: is M reachable from M_0?

The membership of **Reachability** in NP follows from the following result of [3]:

Theorem 3.1 *Shortest Sequence Theorem*

Let (N, M_0) be a LSFC-system, and let M be a reachable marking. There exists an occurrence sequence $M_0 \xrightarrow{\sigma} M$ such that the length of σ is at most

$$\frac{n \cdot (n+1) \cdot (n+2)}{6}$$

where n is the number of transitions of N. ■

This result immediately leads to a nondeterministic polynomial time algorithm for **Reachability**: to decide if M is reachable in (N, M_0), guess a sequence σ of the length above, and check if $M_0 \xrightarrow{\sigma} M$.

We divide the proof of NP-hardness in two parts. First, we reduce the satisfiability problem of boolean formulas in conjunctive normal form (**CNF-SAT** for short) to the following intermediate problem:

Constrained Reachability

Given: a LSFC-system (N, M_0), two subsets $T_{=1}$ and $T_{\geq 1}$ of transitions of N, a marking M of N;

To decide: is there an occurrence sequence $M_0 \xrightarrow{\sigma} M$ such that σ contains each transition of $T_{=1}$ exactly once and each transition of $T_{\geq 1}$ at least once?

In a second step, we reduce **Constrained Reachability** to **Reachability**.

3.1 The first reduction

As usual, a *literal* is a boolean variable or its negation. A *clause* is a disjunction of literals, and a boolean formula in conjunctive normal form, called *CNF-formula* in the sequel, is a conjunction of clauses. We identify a CNF-formula with the set of clauses that appear in it, and a clause with its set of literals.

Let $\phi = \{C_1, \ldots, C_m\}$ be a CNF-formula over variables $x_1, \ldots, x_n$. Without loss of generality, we assume that no clause contains both a literal and its negation, and that for every $1 \leq i \leq n$ there is a clause that contains either x_i or $\overline{x_i}$.

We construct a system (N, M_0), two subsets $T_{\geq 1}$ and $T_{=1}$ of transitions and a marking M. The reader may follow the construction on Figure 1, which shows (N, M_0), $T_{=1}$, $T_{\geq 1}$ and M for the formula

$$\phi = x_1 \ \wedge \ (\overline{x}_1 \vee x_2) \ \wedge (\overline{x}_1 \vee \overline{x}_2)$$

N is constructed in several steps. We start with the empty net. At each step we add new places, transitions and arcs to N, or even new subnets. We describe the steps in a rather informal but hopefully precise way.

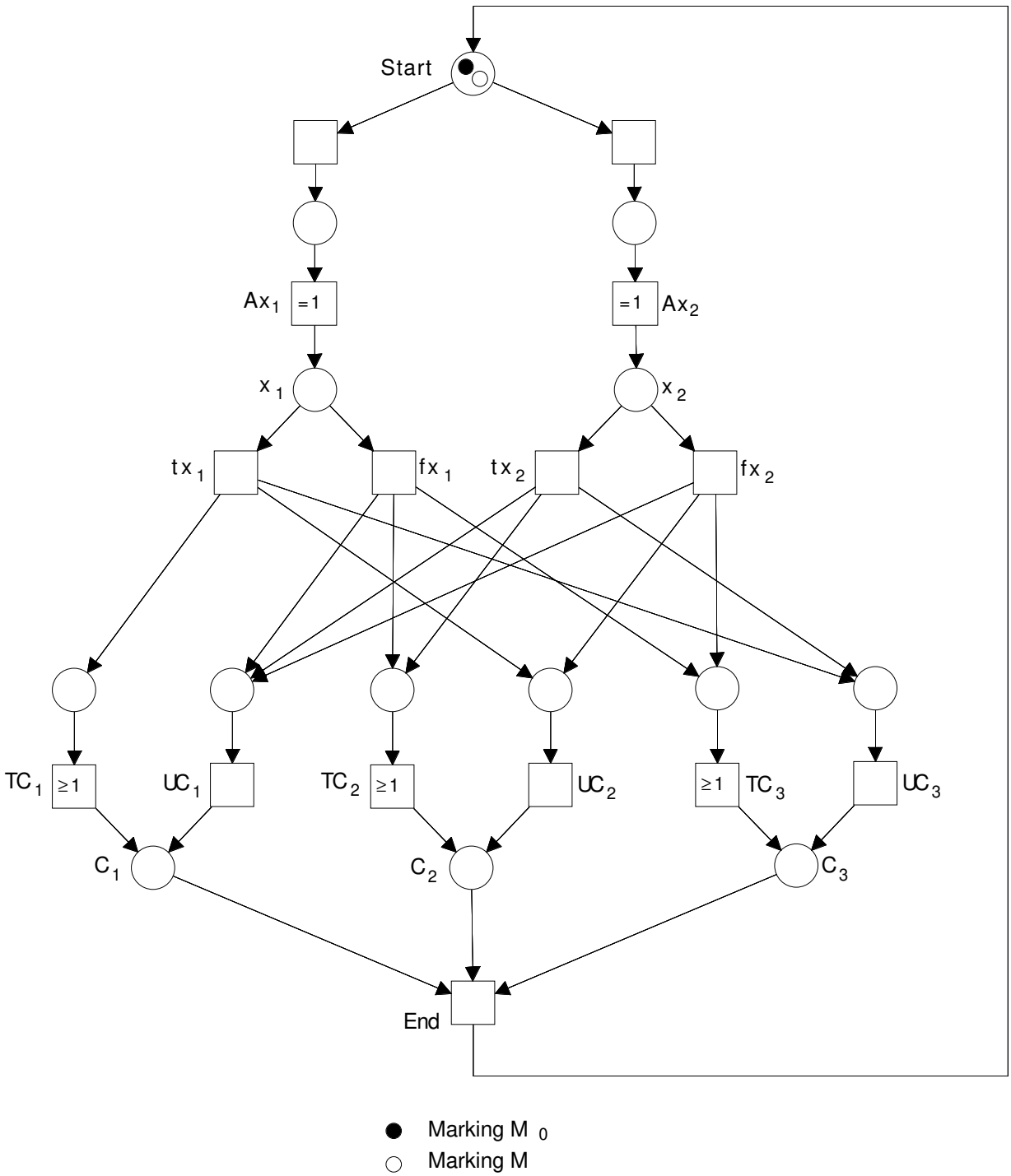

Fig. 1 Net system corresponding to the formula ϕ

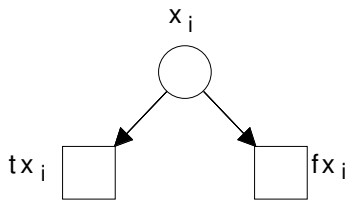

Fig. 2 The net Nx_i

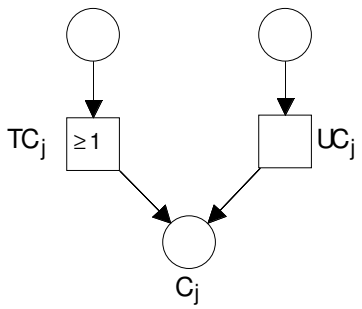

Fig. 3 The net NC_j

- For every variable x_i, add to N the net Nx_i shown in Figure 2;
- for every clause C_j, add to N the net NC_j shown in Figure 3;
- for each variable x_i and every clause C_j, connect the net Nx_i to the net NC_j as shown in Figure 4, according to three possible cases: (1) x_i appears in C_j but $\overline{x}_i$ does not; (2) $\overline{x}_i$ appears in C_j but x_i does not; (3) neither x_i nor $\overline{x}_i$ appear in C_j[4].
- connect the places $C_1, \ldots C_m$ to the places $x_1, \ldots, x_n$ by means of auxiliary nodes, as shown in Figure 5;

This concludes the construction of N. M_0 and M are both equal to the marking that puts one token on the place *Start*, and no token anywhere else. Finally, we take $T_{\geq 1} = \{TC_1, \ldots, TC_m\}$ and $T_{=1} = \{Ax_1, \ldots, Ax_n\}$.
Proving that (N, M_0) is a LSFC-system system is a small exercise, which we leave to the reader.
We briefly explain the intuition behind this construction. Let σ be an occurrence sequence of (N, M_0) in which the transitions of $T_{=1}$ occur exactly once, and the transitions of $T_{\geq 1}$ occur at least once.

- The occurrence of the transition Ax_i signals that x_i is going to be assigned a truth value.
- The nets Nx_i are used to determine the assignment of the variables. Since the transitions of the set $T_{=1}$ occur exactly once in σ, for every $1 \leq i \leq n$ either tx_i or fx_i occurs in σ, but not both. In this way, σ determines a unique truth assignment A_σ defined by: $A_\sigma(x_i) =$ **true** if tx_i occurs in σ, and $A_\sigma(x_i) =$ **false** if fx_i occurs in σ.

[4]Notice that the case that both x_i and $\overline{x}_i$ appear in C_j need not been considered due to our assumption on ϕ.

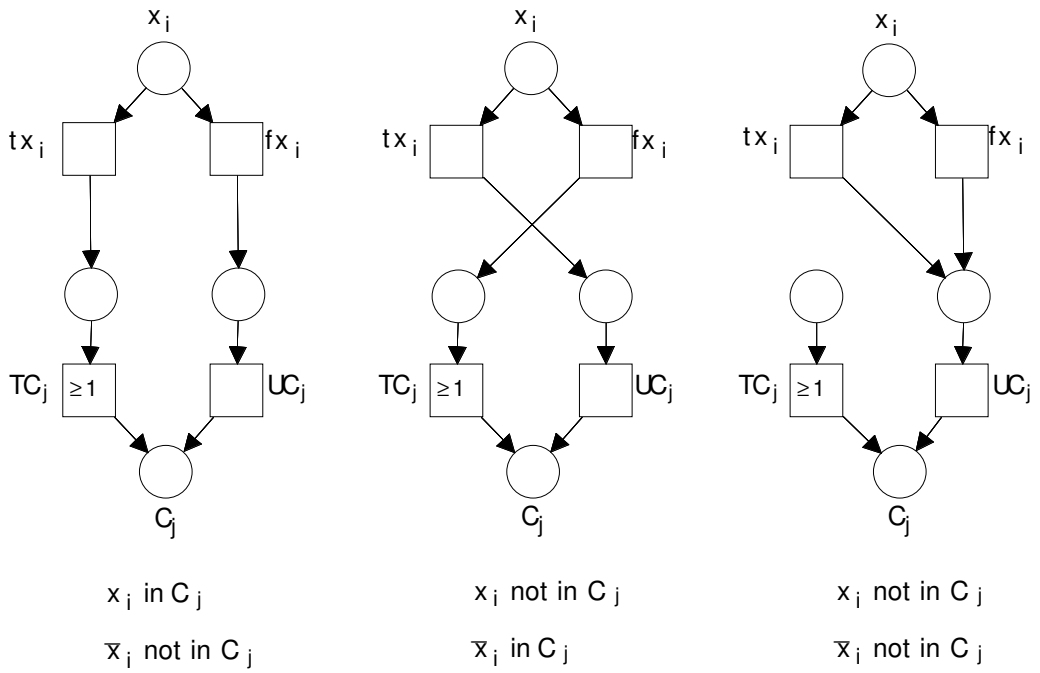

Fig. 4 Connection from Nx_i to NC_j

- After assigning a value to a variable, σ updates the truth values of the clauses. These values are initially set to *false*. The connections between each pair of nets Nx_i, NC_j are chosen with the following intended meaning: the occurrence of TC_1 in σ sets C_j to **true**, while the occurrence of UC_j leaves its value unchanged. Therefore, C_j is true under A_σ if and only if the transition TC_j occurs at least once in σ.

So we have the following lemma:

Lemma 3.2

Constrained Reachability is NP-hard.

Proof:

Let (N, M_0), $T_{\geq 1}$, $T_{=1}$ and M be an instance of **Constrained Reachability**, and let $M_0 \xrightarrow{\sigma} M$ be an occurrence sequence satisfying the conditions of the problem. Since every transition of $T_{\geq 1}$ occurs in σ at least once, the truth assignment A_σ makes all clauses true, which implies that ϕ is satisfiable.

Conversely, let ϕ be a satisfiable formula. We take an assignment which makes ϕ true, and use it to construct an occurrence sequence $M_0 \xrightarrow{\sigma} M$ such that every transition of $T_{\geq 1}$ occurs at least once in σ and every transition of $T_{=1}$ at least once. The sequence σ is the concatenation of sequences $\sigma_1, \ldots, \sigma_n$. Each σ_i starts with the occurrence of one of the output transitions of the place *Start*, followed by the corresponding Ax_i transition and the transition tx_i or fx_i, according to the assignment, and ends with the transition *End*. Due to the way the nets Nx_i and NC_j are connected, σ contains every transition of $T_{\geq 1}$ at least once. ■

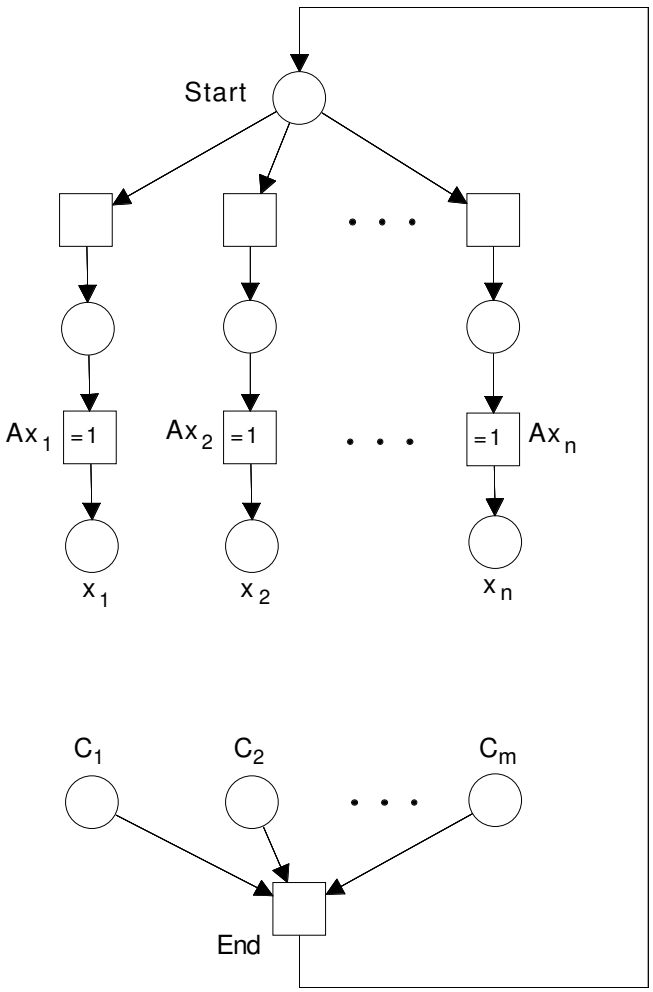

Fig. 5 Connection from $NC_1, \ldots, NC_m$ to $Nx_1, \ldots, Nx_n$

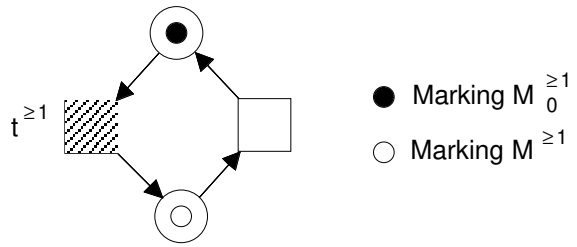

Fig. 6 The system $(N^{\geq 1}, M_0^{\geq 1})$

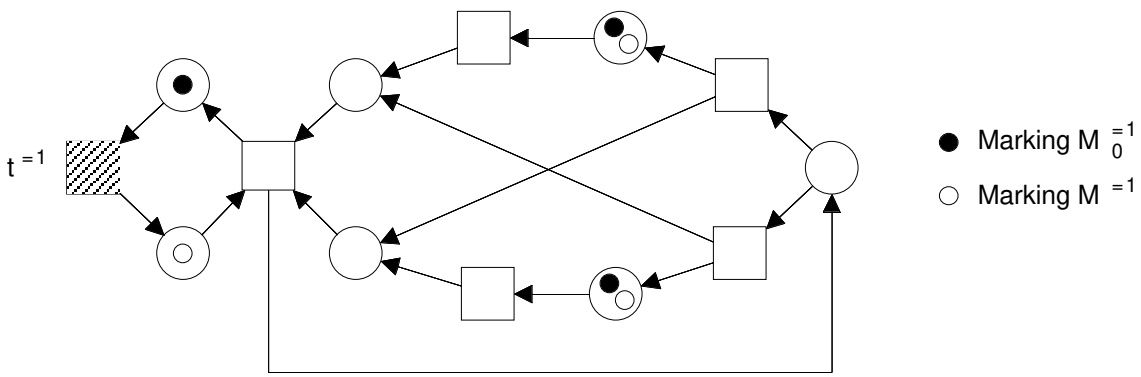

Fig. 7 The system $(N^{=1}, M_0^{=1})$, the transition $t^{=1}$ and the marking $M^{=1}$.

3.2 The second reduction

We show how to reduce **Constrained Reachability** to **Reachability**.

Given a LSFC-system (N, M_0), two subsets $T_{\geq 1}$ and $T_{=1}$ of transitions and a marking M, we construct an LSFC-system (N', M_0') and a marking M', such that M is reachable in (N, M_0) under the constraints given by $T_{\geq 1}$ and $T_{=1}$ if and only if M' is reachable in (N', M_0').

In order to define (N', M_0') and M' we need some "building blocks"and a composition operation. The blocks are shown in Figures 6 and 7.

The following two lemmata are easy to prove, for instance by inspection of the reachability graph:

Lemma 3.3

Let $(N^{\geq 1}, M_0^{\geq 1})$, $M^{\geq 1}$ and $t^{\geq 1}$ be as shown in Figure 6. $(N^{\geq 1}, M_0^{\geq 1})$ is a LSFC-system, and satisfies the following property: there exists an occurrence sequence $M_0^{\geq 1} \xrightarrow{\sigma} M^{\geq 1}$ containing n-times the transition $t^{\geq 1}$ if and only if $n \geq 1$. ■

Lemma 3.4

Let $(N^{=1}, M_0^{=1})$, $M^{=1}$ and $t^{=1}$ be as shown in Figure 7. $(N^{=1}, M_0^{=1})$ is a LSFC-system, and satisfies the following property: there exists an occurrence sequence $M_0^{=1} \xrightarrow{\sigma} M^{=1}$ containing n-times the transition $t^{=1}$ if and only if $n = 1$.[5] ■

[5] In fact, a stronger statement holds: $M_0^{=1} \xrightarrow{\sigma} M^{=1}$ if and only if $\sigma^{=1} = t^{=1}$.

The composition operation is defined on (isomorphy classes of) nets in the following way: let N_1 and N_2 be two disjoint nets (if they are not disjoint, rename places and transitions appropriately), and let t_1 and t_2 be transitions of N_1 and N_2, respectively. The *merge* of t_1 and t_2 is the operation consisting of the following three parts:[6]

- put N_1 and N_2 side by side;
- remove t_1 and t_2 together with their incident arcs;
- add a new transition t; let the preset (postset) of t be the union of the presets (postsets) of t_1 and t_2.

Let N be the net obtained after performing this operation. The set of places of N is the disjoint union of the places of N_1 and N_2. Therefore, a marking of N is characterised by its projections onto these two sets of places. We denote by (M_1, M_2) the marking that projects onto markings M_1 of N_1 and M_2 of N_2.

The composition operation is extended to systems as follows: the system obtained after the merge of transitions t_1 and t_2 of the systems (N_1, M_1) and (N_2, M_2) is $(N, (M_1, M_2))$, where N is the net defined above.

We are now ready to construct the system (N', M'_0). Take (N, M_0), and merge iteratively each transition of $T_{\geq 1}$ with the transition $t^{\geq 1}$ of a fresh copy of $(N^{\geq 1}, M_0^{\geq 1})$. Then, merge iteratively each transition of $T_{=1}$ with the transition $t^{=1}$ of a fresh copy of $(N^{=1}, M_0^{=1})$.

The system (N', M') (and with it the marking M') is constructed analogously: just substitute M' for M'_0, $M^{\geq 1}$ for $M_0^{\geq 1}$, and $M^{=1}$ for $M_0^{=1}$.

At this point, the reader is possibly willing to accept the truth of the following lemma without further discussion. If this is not the case, a (rather tedious) proof is given in the Appendix.

Lemma 3.5

Let (N, M_0), $T_{\geq 1}$, $T_{=1}$, and M be an instance of **Constrained reachability**, and let (N', M'_0) and M' be as described above. (N', M'_0) is a LSFC-system, and M can be reached in (N, M_0) satisfying the constraints given by $T_{\geq 1}$ and $T_{=1}$ iff M' is reachable in (N', M'_0). ■

We can now easily prove NP-hardness, and, using the result at the beginning of the section, NP-completeness of **Reachability**:

Theorem 3.6

Reachability is NP-complete.

Proof:

Membership in NP was shown at the beginning of this section. NP-hardness follows immediately from Lemma 3.2, which reduces **CNF-SAT** to **Constrained Reachability**, and Lemma 3.5, which reduces **Constrained Reachability** to **Reachability**. ■

[6] We give an informal definition, which we consider to be precise enough for our purposes. A more formal definition would just be more difficult to read.

4 Reachability in live and bounded free-choice systems

We show that the reachability problem of LBFC systems, not necessarily safe, is still NP-complete. Clearly, the problem is NP-hard, and so it suffices to prove membership in NP. In [4], Desel and the author prove a generalisation of the Shortest Sequence Theorem (Theorem 3.1) to b-bounded systems: if M is reachable from M_0, then there exists an occurrence sequence $M_0 \xrightarrow{\sigma} M$ such that the length of σ is at most

$$b \cdot \frac{n \cdot (n+1) \cdot (n+2)}{6}$$

where n is the number of transitions of N.

It follows from this generalisation that the reachability problem of live and b-bounded free-choice systems belongs to NP for every $b \geq 1$. However, it does not follow that the reachability problem for LBFC-systems belongs to NP: the reason is that a live and bounded system encoded into a binary string of length n can be $O(2^n)$-bounded. In order to prove membership in NP for this problem, we use the following result, due to Lee, Kodama and Kumagai [11]:

Theorem 4.1

Let (N, M_0) be a LBFC-system, and let M be a marking of N. M is reachable from M_0 iff the following conditions hold:

(1) The equation $M = M_0 + \mathbf{N} \cdot X$ has an integer solution, and

(2) Every trap of the subnet of N generated by the transitions of the support of X is marked at M_0. ■

Now, we have the following nondeterministic polynomial time algorithm:

1. Guess a subset T of transitions of N.
2. Check that every trap of the subnet generated by T is marked at M_0 (a polynomial algorithm for this problem can be found in [12, 4]).
3. Guess a solution of $M = M_0 + \mathbf{N} \cdot X$ where X has support T (it is well known that a solution exists iff a solution of polynomial size exists, see for instance [8]).

It should be remarked that the proof of Theorem 4.1 given in [11] is very complicated, and not well understood by many people. Therefore, the result should be used with a bit of care before a more transparent proof is found.

5 Conclusions

We have determined the exact complexity of reachability in live and safe and live and bounded free-choice systems, a problem which had been open for several years. Contrary to the expectations, reachability turns out to be NP-complete. The NP-hardness proof is a rather straightforward reduction from the satisfiability problem for boolean formulas in conjunctive normal form. The author now believes that the problem was not open for such a long time because of its difficulty, but because the researchers directed their efforts in the wrong direction. On the other hand, these efforts have produced many of the nice results on reachability in free-choice systems mentioned in the introduction.

Acknowledgements

I have discussed this problem with Jörg Desel many times, and I thank him very specially for sharing his insights with me. Many thanks also to Andrei Kovalyov, who renewed my interest in the problem during a recent visit to Munich funded by a DAAD grant. Finally, I thank Eike Best for very helpful discussions.

References

[1] F. Commoner. Deadlocks in Petri Nets. Technical Report CA-7206-2311, Applied Data Research, Inc., Wakefield, Massachusetts, 1972.

[2] J. Desel and J. Esparza. Reachability in Cyclic Extended free Choice Systems. *Theoretical Computer Science*, 114:93–118, 1993.

[3] J. Desel and J. Esparza. Shortest Paths in Reachability Graphs. *Journal of Computer and System Sciences*, 51(2):314–323, 1995.

[4] J. Desel and J. Esparza. *Free-choice Petri Nets*, volume 40 of *Cambridge Tracts in Theoretical Computer Science*. Cambridge University Press, 1995.

[5] J. Esparza and M. Silva. A Polynomial-Time Algorithm to Prove Liveness of Bounded Free Choice Nets. *Theoretical Computer Science*, 102:185–205, 1992.

[6] Michael R. Garey and David S. Johnson. *Computers and Intractability: A Guide to the Theory of NP-completeness*. Freeman, 1979.

[7] M. H. T. Hack. *Analysis of Production Schemata by Petri Nets*. M.s. thesis, Cambridge, Mass.: MIT, Dept. Electronical Engineering, 1972.

[8] J. E. Hopcroft and J. Ullman. *Introduction to Automata Theory, Languages and Computation*. Addison-Wesley, 1979.

[9] A. Kovalyov and J. Esparza. A polynomial algorithm to compute the concurrency relation of free choice signal transition graphs. Technical Report TUM-I9528, Technische Universität München, 1995.

[10] A. V. Kovalyov. Good Behaviour in Extended Free Choice Nets. Technical Report FBI-HH-B-176/95, Fachbereich Informatik, Universität Hamburg, 1995.

[11] D.-I. Lee, S. Kumagai, and S. Kodama. Handles and reachability analysis of free choice nets. In G. De Michelis and M. Diaz, editors, *Proceedings of the 16th International Conference on Application and Theory of Petri-Nets*, volume 935 of *Lecture Notes in Computer Science*, pages 298–315. Springer-Verlag, 1995.

[12] P. Starke. *Analyse von Petri-Netz-Modellen.* Teubner, 1990.

6 Appendix: proof of Lemma 3.5

The following lemma is an easy consequence of the definition of the merge operation:

Lemma 6.1

Let N be the net obtained after the merge of transitions t_1 and t_2 of the nets N_1 and N_2. $(L_1, L_2) \xrightarrow{\sigma} (L_1', L_2')$ is an occurrence sequence of N iff there exist two occurrence sequences

$$L_1 \xrightarrow{\sigma_1^1\, t_1\, \sigma_1^2\, t_1 \ldots t_1 \sigma_1^n} L_1' \quad \text{and} \quad L_2 \xrightarrow{\sigma_2^1\, t_2\, \sigma_2^2\, t_2 \ldots t_2 \sigma_2^n} L_2'$$

of N_1 and N_2, respectively, such that $\sigma = \tau^1 t \tau^2 t \ldots t \tau^n$, and τ^i is an arbitrary interleaving of σ_i^1 and σ_i^2. ■

We have:

Lemma 6.2

Let (N_1, M_1) and (N_2, M_2) be LSFC-systems, and let t_1 and t_2 be transitions of N_1 and N_2, respectively.

(1) The system (N, M) obtained after the merge of t_1 and t_2 is live and safe.

(2) If N_1, N_2 are free-choice nets, $({}^\bullet t_1)^\bullet = \{t_1\}$ in N_1 and $({}^\bullet t_2)^\bullet = \{t_2\}$ in N_2, then N is also free-choice.

Proof:

(1) It follows from Lemma 6.1 that (L_1, L_2) is a reachable marking of (N, M) iff L_1 and L_2 are reachable markings of (N_1, M_1) and (N_2, M_2). Since (N_1, M_1) and (N_2, M_2) are safe, (N, M) is safe.

For the liveness part, let (L_1, L_2) be an arbitrary reachable marking of (N, M), and let u be an arbitrary transition of N. Consider two cases:

- $u = t$ (i.e., u is the merge of t_1 and t_2).
  Since (N_1, M_1) and (N_2, M_2) are live, there exist occurrence sequences $L_1 \xrightarrow{\sigma_1\, t_1} L_1'$ and $L_2 \xrightarrow{\sigma_2\, t_2} L_2'$. Let τ be an arbitrary interleaving of σ_1 and σ_2. Then $(L_1, L_2) \xrightarrow{\tau\, t} (L_1', L_2')$ is an occurrence sequence of N.

- $u \neq t$. Assume without loss of generality that u belongs to N_1. Since (N_1, M_1) and (N_2, M_2) are live, there exist occurrence sequences

$$L_1 \xrightarrow{\sigma_1^1\, t_1\, \sigma_1^2\, t_1 \ldots t_1\, \sigma_1^n\, u} L_1' \quad \text{and} \quad L_2 \xrightarrow{\sigma_2^1\, t_2\, \sigma_2^2\, t_2 \ldots t_2\, \sigma_2^n} L_2'$$

  Let τ^i be be an arbitrary interleaving of σ_1^i and σ_2^i. Then

$$(L_1, L_2) \xrightarrow{\tau^1\, t\, \tau^2\, t \ldots t\, \tau^n\, u} (L_1', L_2')$$

  is an occurrence sequence of N.

(2) Follows immediately from the definitions. ■

Lemma 3.5 *(Restated)*

Let (N, M_0), $T_{\geq 1}$, $T_{=1}$, and M be an instance of **Constrained reachability**, and let (N', M_0') and M' as described above. (N', M_0') is a LSFC-system, and M can be reached in (N, M_0) satisfying the constraints given by $T_{\geq 1}$ and $T_{=1}$ iff M' is reachable in (N', M_0').

Proof:

(N', M_0') is live and bounded by Lemma 6.2(1). It is free-choice because the transitions of the sets $T_{\geq 1}$ and $T_{=1}$ and the transitions $t_{\geq 1}$ and $t_{=1}$ satisfy the conditions of Lemma 6.2(2). Assume that $M_0 \xrightarrow{\sigma} M$ for some sequence σ such that each transition of $T_{=1}$ occurs exactly once in σ, and each transition $t \in T_{\geq 1}$ occurs $\sigma(t) \geq 1$ times in σ. By Lemma 3.3, for each transition $t \in T_{\geq 1}$ there exists an occurrence sequence $M_0^{\geq 1} \xrightarrow{\sigma^{\geq}} M^{\geq 1}$ which contains the transition $t^{\geq}$ exactly $\sigma(t)$ times. By Lemma 3.4, there exists an occurrence sequence $M_0^{=1} \xrightarrow{\sigma^{=}} M^{=1}$ which contains the transition $t^{=}$ exactly once. By repeatedly applying Lemma 6.1 we obtain from these sequences an occurrence sequence of (N', M_0') leading to M'.

Conversely, assume that there exists an occurrence sequence $M_0 \xrightarrow{\sigma} M'$ in (N', M_0'). For each $t \in T^{=}$ ($t \in T^{\geq}$), let σ_t be the projection of σ on the transitions of the fresh copy of $N^{=}$ ($N^{\geq}$) corresponding to t. By Lemma 6.1 we have $M_0^{=} \xrightarrow{\sigma_t} M^{=}$ ($M_0^{\geq} \xrightarrow{\sigma_t} M^{\geq}$). By Lemma 3.4 (Lemma 3.3), σ_t contains the transition $t^{=1}$ exactly once (the transition $t^{\geq 1}$ more than once). Then, the projection of σ on the transitions of N yields an occurrence sequence satisfying the constraints given by $T_{\geq 1}$ and $T_{=1}$. ■